PC case accessories

Model: **AK-CA-44**

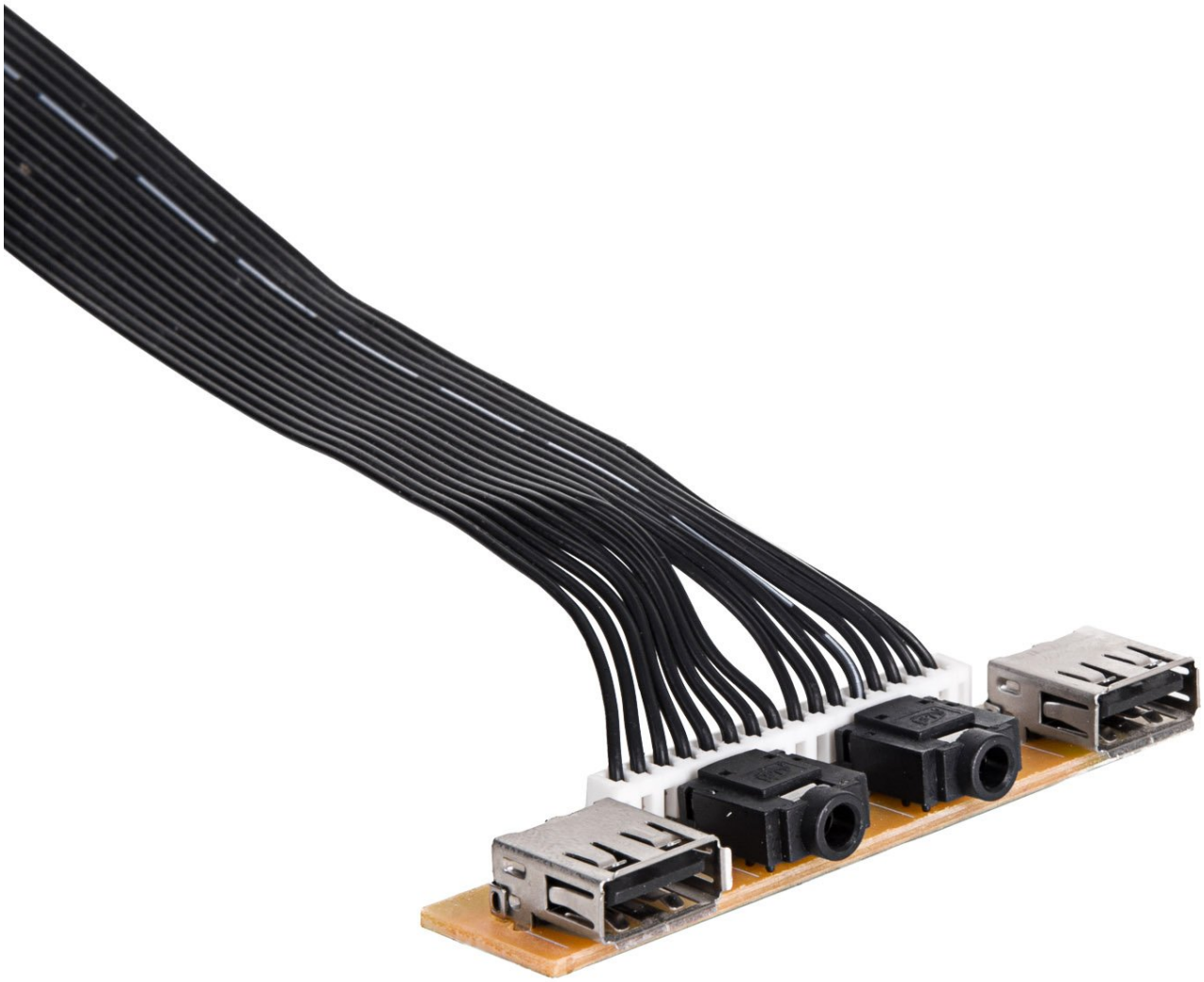

Product code	AK-CA-44
Product type	PC case accessories
USB 2.0 ports on the front panel	2 pcs
Audio input on the front panel	1 pc
Microphone input on the front panel	1 pc
Cable length	65 cm
Package	UniBag
Product size (L x W x H)	198 x 140 x 27 mm
Package size (L x W x H)	199 x 141 x 28 mm
Net weight	68.9 g
Gross weight	75.9 g
EAN code	5901720133281
Warranty	24 months

Description

The front panel Akyga® AK-CA-44 designed for mounting in computer cases as a service or replacement part, consists of **two USB 2.0 ports**, a headphone and a microphone inputs. The USB 2.0 ports are perfect for connecting a wireless mouse, keyboard, external storage media or other peripheral devices.
Audio inputs allow to connect speakers or microphone headphones. The panel works in accordance with the Audio HD system. The cable length of **65 cm** allows for easy connection and arrangement of cables inside the case.
The panel is great as a replacement of broken parts, as well as in case of need to have more USB ports. It is an ideal solution that can be used in Akyga Midi Tower enclosures.

Sketch

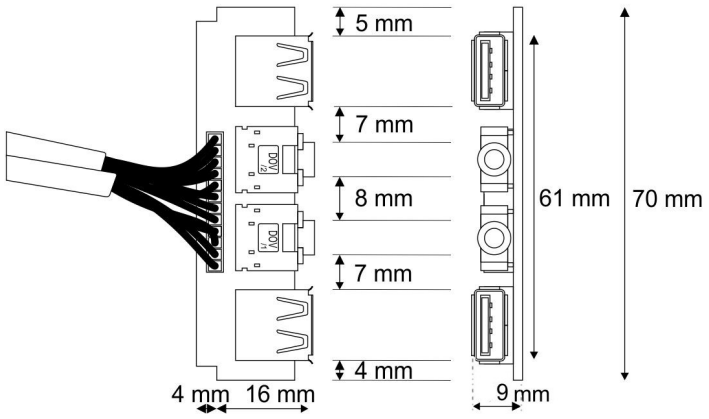
5 mm
7 mm
8 mm
7 mm
4 mm
4 mm
16 mm
9 mm
61 mm
70 mm

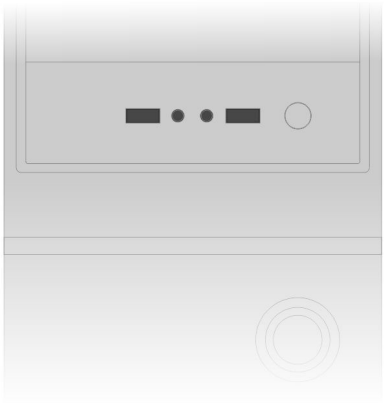

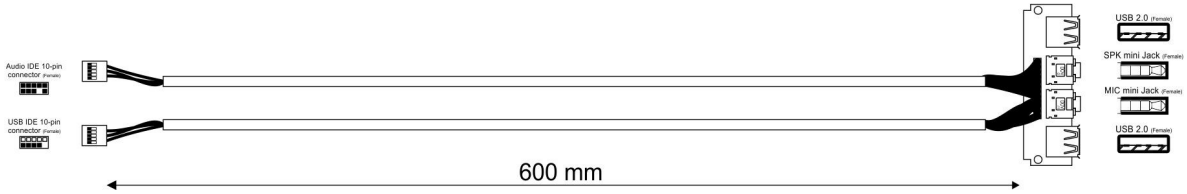
Audio IDE 10-pin connector (Female)
USB IDE 10-pin connector (Female)
USB 2.0 (Female)
SPK mini Jack (Female)
MIC mini Jack (Female)
USB 2.0 (Female)
600 mm